Nautel NDB Systems for the Offshore Market

Gary Galbraith, P.Eng.
Technical Sales Representative,
Navigational Products

Making Digital Radio **Work.**

Corporate History

- Design, manufacture, sales and support of 3 product lines
  - **Navigational Products**
  - **AM and FM transmitters for radio stations**
  - **Industrial RF products**
- Established in 1969
- Products installed in over 177 countries
- Exceptional field reputation for reliable products
- Dedicated, long-term staff
- Quality Management System audited by Bureau Veritas and registered/certified to **ISO 9001:2008**.

45Year History of Innovation

NS Series LF Sonar Amplifier - 2010

VS Series Low Power FM - 2009

NX Series MW 25-50 kW - 2008

NV Series High Power FM - 2008

eLORAN technology - 2008

HD Power Boost technology - 2008

NX Series High Power MW - 2007

WEB based remote control - 2007

Space Propulsion applications - 2007

Vector NDB/DGPS series with Patented Antenna Current Stabilisation – 2005

Adaptive Pre-Correction – 2005

Reliable HD Radio Transport

Protocol for FM Digital Broadcast– 2006

NX Link – TCP/IP Based Control - 2006

XR Series – 4th Generation AM Transmitters 3 – 50 kW - 2005

HD Radio FM Transmitters &

Direct-to-Channel Digital FM Exciter – 2004

DRM 200 kW, MW transmitter goes on-air in Europe - 2003

2002 - DRM and IBOC Digital Compatible AM Transmitters

2000 - Nautel launches 20 kW and 40 kW FM Transmitters

1994-1996 – Nautel launches super efficient 12 kW - 60 kW FM Transmitters

1993 – Nautel launches first 10 kW FM Transmitter

1990 – Nautel launches first solid state 100 kW & 200 kW AM Transmitters

1982 – Nautel launches first solid state 10 kW & 50 kW AM Transmitters

1974 – Nautel launches first solid state 2 kW AM Transmitter

1970 – Nautel introduced first solid state Radio Beacon Transmitter

1969
Dennis Covill
Founds Nautel

Making Digital Radio **Work.**

Product Lines

- MF AM radio broadcast transmitters (both analog and digital)
- VHF FM radio broadcast transmitters (both analog and digital)
- LF/MF Navigational non-directional radio beacon (NDB) transmitter systems
- LF/MF Differential Global Positioning System (DGPS) transmitters
- MF NAVTEX transmitter systems
- HF amplifiers and tuning/matching networks for industrial applications and plasma rocket engines
- Next Generation LORAN (Long Range Navigation) transmitters
- VHF FM weather radio transmitters
- LF Sonar amplifiers

Installed Base

- Solid State NDB and DGPS Transmitters
  4,200+ units since 1970

- Solid State MF Telegraph Transmitters
  200+ units since 1970

- Solid State VHF – FM Broadcast Transmitters
  2,300+ units since 1992

- Solid State MW – AM Broadcast Transmitters
  3,300+ units since 1982

- Solid State VHF – FM Weather Radio Transmitters
  25+ units since 2010

…over 11,000 transmitters shipped to date!

Worldwide Navigation Customers

FAA

USCG

USAF

US FHWA

CCG

NAV Canada

AIRSERVICES AUSTRALIA

Installed Nautel Navigation Systems

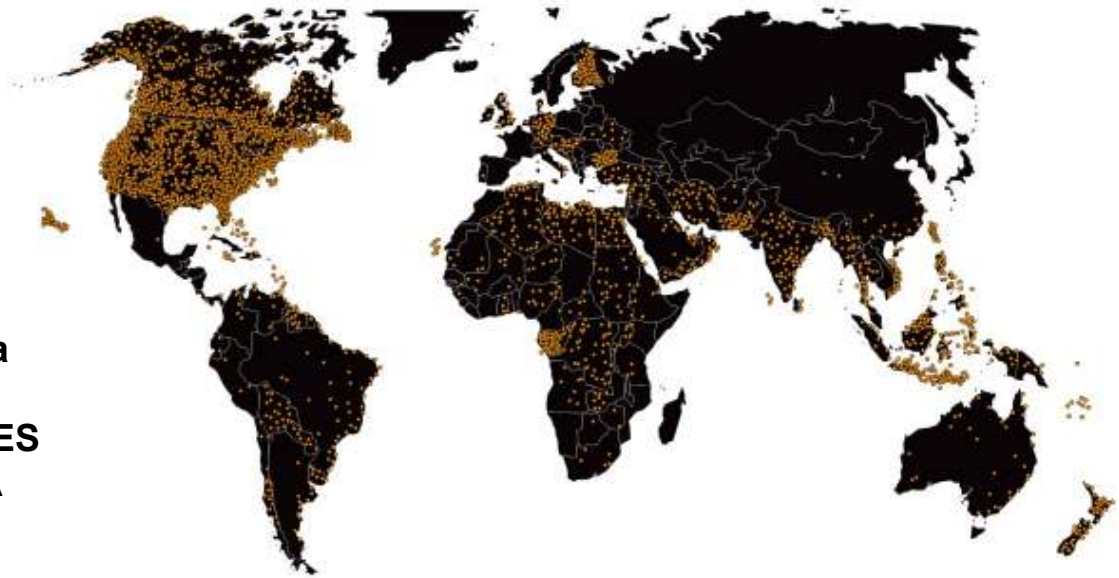

World Wide Civil Aviation Authorities

ONGC

Shell

INFRAERO

SAIPEM

ICAO

World Wide Offshore Systems Integrators

Design Capabilities

- Multidisciplinary Research & Development team of over 30 technical staff
- In-house design skills:
  - Solid state amplifier design from 100 kHz to 200 MHz
  - Antenna Design and Computer Simulation
  - Analog and Digital Communications theory
  - RF matching, combining and filtering at high power and high voltages
  - RF Magnetics
  - Power Supplies
  - Digital Hardware Design
  - Digital Signal Processing
  - Data Communications Systems
  - Networking and TCP development

Facilities

Nova Scotia, Canada:
- **Headquarters**
- **Production**
- **160 Employees**
- **+ 70,000 sq. ft.**

Maine, USA:
- **Wholly owned subsidiary**
- **Production**
- **40 Employees**
- **+ 36,000 sq. ft.**

Additional Parts Depots - Memphis, TN USA & Cranleigh, Surrey UK
Service Center - Quincy, IL USA

Production Capabilities

Computerised Fabrication Shop

PWB Assembly

Light Assembly

Final Assembly

Final Production Test

Packing and Shipment

Making Digital Radio **Work.**

Quality Manufacturing

- Quality Management System registered/certified to the **ISO9001:2008** international quality standard
- products build to stringent quality standards with industry leading features, performance, and reliability
- products are the result of the pride and craftsmanship of dedicated professionals
- each product is assembled by a team of individual people - no assembly robots or fabrication lines
- production staff with an average of 15 years experience
- Nautel controls every aspect of production from workmanship to electrical components to sheet metal fabrication

Customer Service & Training

- Emergency technical support is available 24 hours a day, 7 days a week and is provided by Nautel Customer Service technical staff
- Both facilities house a full inventory of parts, modules, and sub-assemblies to support customer's maintenance needs
- Parts depots also exist in Memphis, TN, USA and in the UK to assist in serving US and European customers
- A next day module exchange program is available in Canada and the USA and Nautel is currently in the process of expanding this service to many global locations via remote spares depots.
- Nautel's first priority is getting customers back on the air, even if the model in question was shipped in 1970
- Installation Supervision and Commissioning Services are available
- RF Basics, System Specific Training and Certified Installer/Maintainer programs, comprised of classroom as well as hands-on practical instruction, are available from Nautel

Nautel User's Group

Membership includes:

- Online access to Nautel's restricted NUG website
  - Technical FAQs
  - Technical manuals
  - Information sheets
  - Field upgrade documents
- Special NUG discounts on select Nautel training programs

Standard Products

AM


J1000


XR3 & XR6


XR12


NX25


NX50


NX100-NX800

FM


VS Series


NV3.5, NV5, NV7.5, NV10, NV15, NV20, NV30, NV40

Navigation


Vector Series NDB/DGPS/Navtex


NDB/DGPS/Navtex



Antenna Tuning Units


NL Series Next Generation Loran


LF Antennas

Industrial RF


HF Amplifier


Custom Impedance Matcher


Plasma RF Power Sources


NS Series
LF High Power Amplifier


NG Series
Weather Radio Transmitters

Making Digital Radio **Work.**

NDB Overview

Non-Directional Radiobeacon Transmitters:

Operate in MW band between 190-1250 kHz and 1600-1800 kHz

Transmit (AM) beacon/airport identification via keyed Morse code

Operate into physically and electrically short antenna

Higher power for outer marker, lower power for approach

In airports, used as last resort, therefore are considered mission critical

Need to be highly reliable and require minimal maintenance

NDB Overview

- **Used to guide helicopters to offshore platforms and vessels**
- **Helipad antenna provides reasonably efficient radiation, with no vertical obstruction**

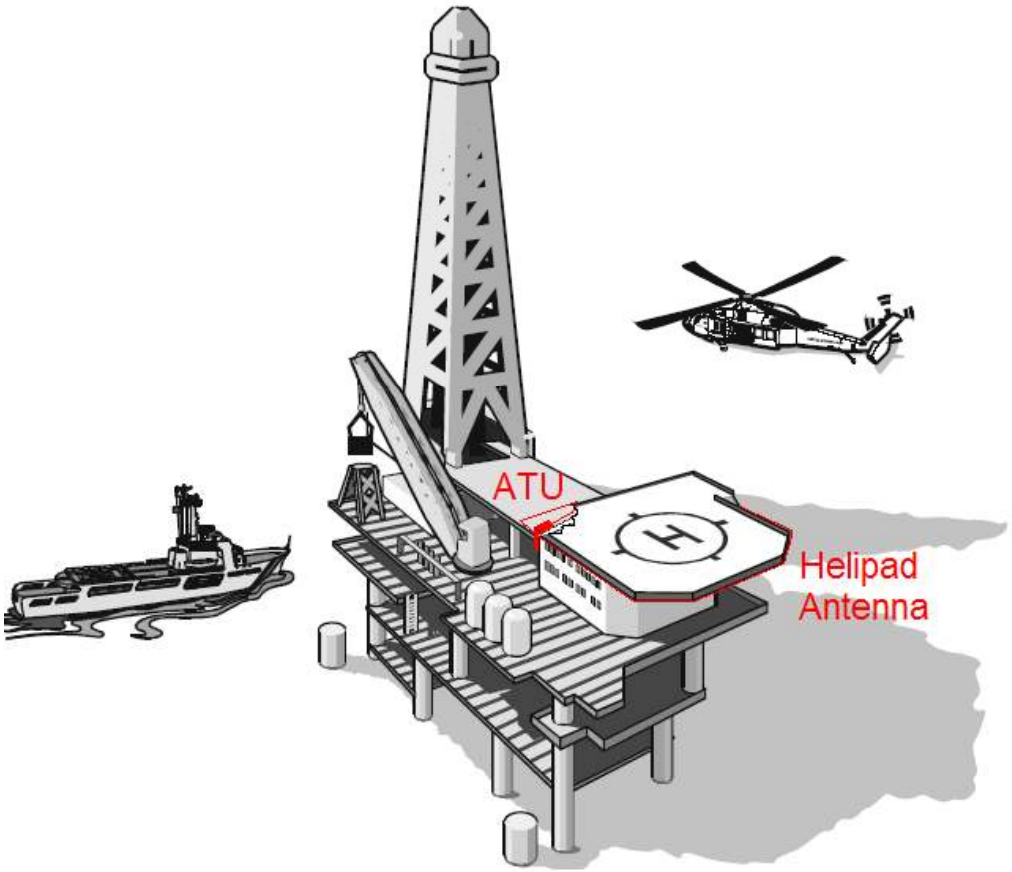

NDB Overview

ADF Receiver:

- Located in an airplane or helicopter; consists of a simple frequency selectable receiver, indicator, and rotating antenna
- Acts as a field strength meter, with a direction finding needle
- Needle points towards the strongest indicated source of the selected frequency, based on antenna position
- When target is underneath, the needle spins in circles

NDB Overview

As helicopter approaches NDB, the signal strength increases and the needle indicates the direction of the platform or vessel

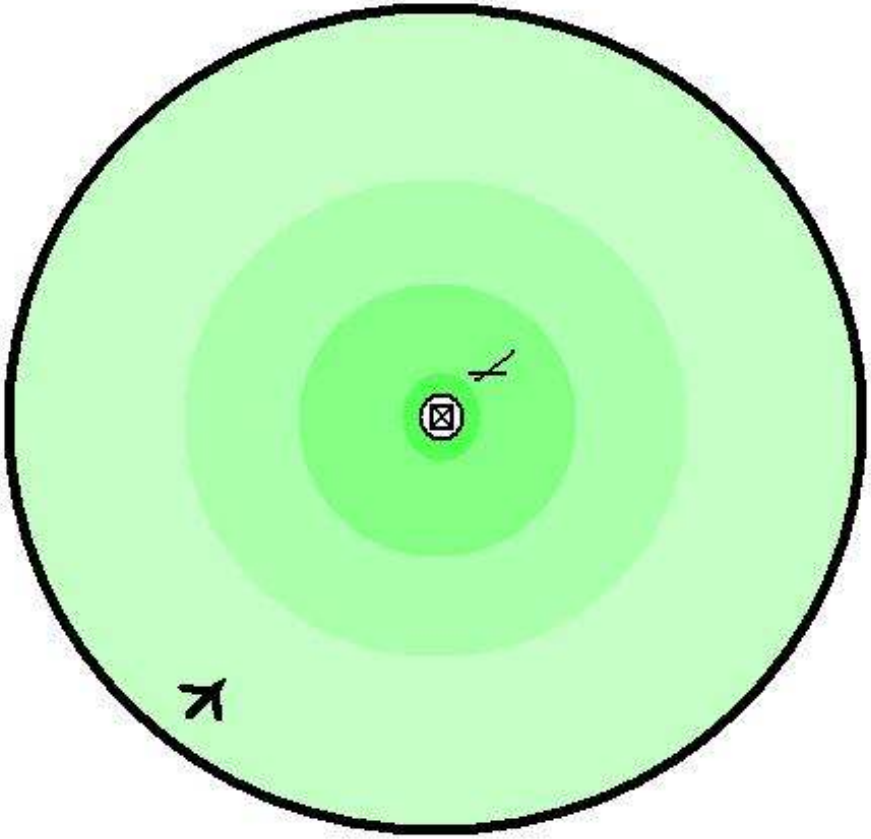

NDB Overview

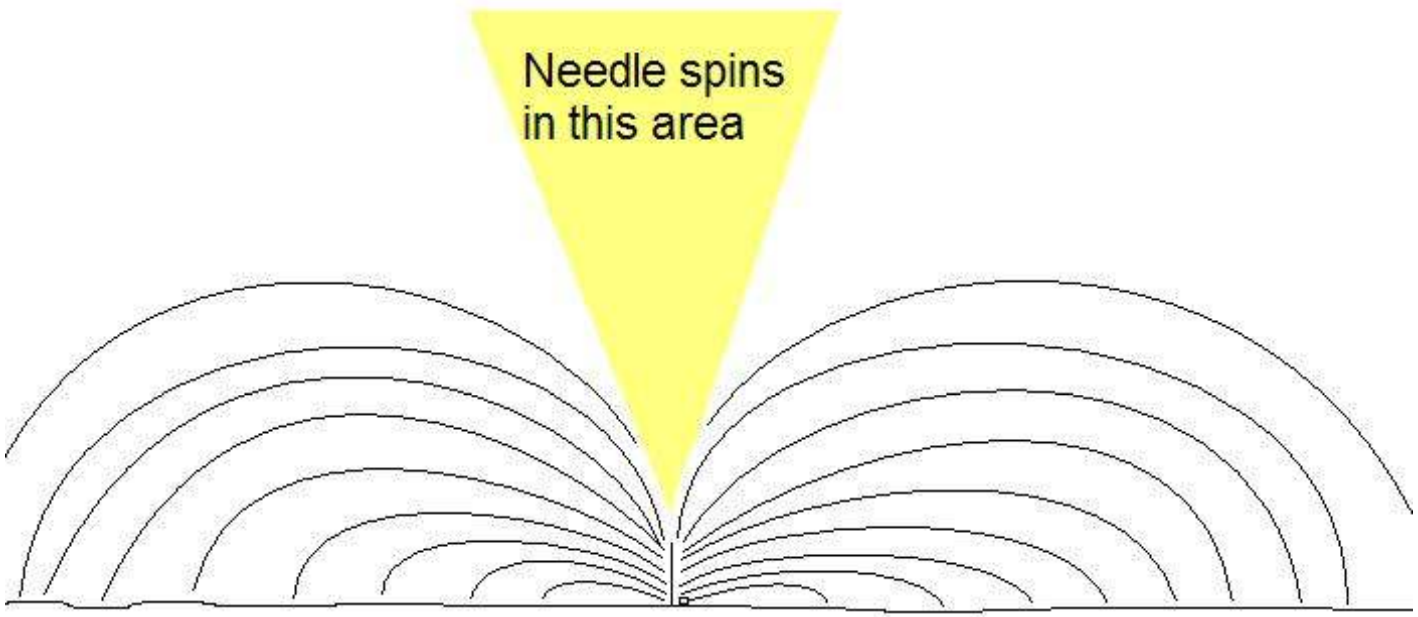

- **In almost all cases, radiation is omnidirectional**
- **Structures can cause reflections and false readings on cockpit instruments**

NDB Overview

TYPICAL NDB SYSTEM

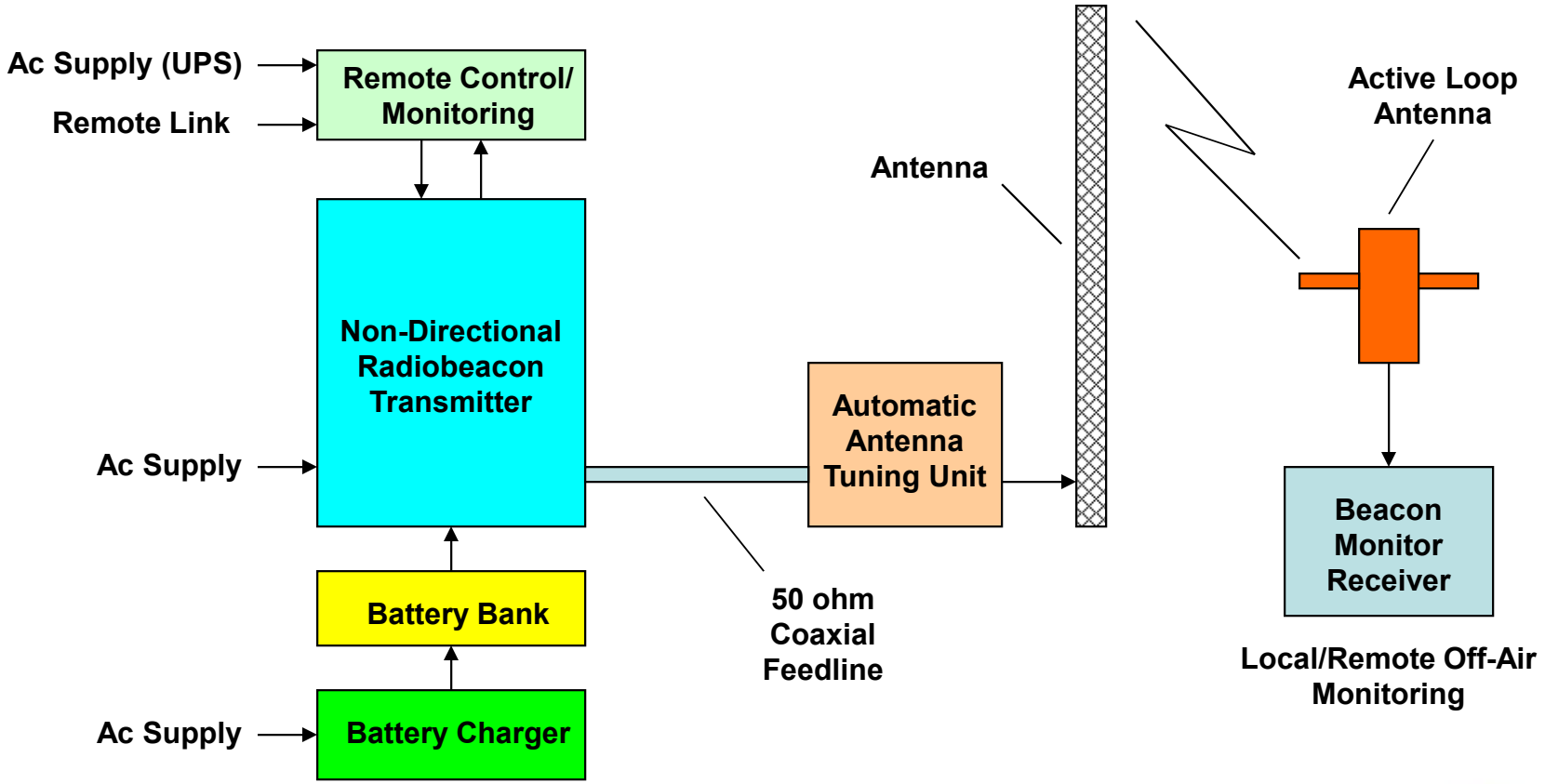

Offshore NDB System Components

Vector125

125 W Beacon

ATU500SR

125 W Antenna Tuning Unit

ATU-LP

250 W Antenna Tuning Unit

Transmitting Antennas

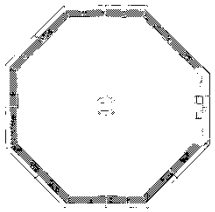

CL-HD

VR-Link with ECMP3

Remote Control/Monitor with Extended Control/Monitor Panel

NRB4

Beacon Monitor Receiver

NLA/2

Receiving Loop Antenna

Product Application

VECTOR 125

• 125 watt transmitter used to guide helicopters to offshore oil drilling platforms or vessels with a bearing via ADF (compass)

ATU500SR & ATU-LP

• antenna tuning units used to match the 50 ohm output impedance of the transmitter to the impedance of the antenna system (typically a lower resistance and some value of capacitance base on the geometry of the antenna)

Product Application

ECMP3 (Extended Control/Monitoring Panel)

• used to provide extended remote control and monitoring of the NDB system with connection to the transmitter via parallel wiring

VR-Link

• used to provide remote control and monitoring of the NDB system, at greater distances than that provided by the ECMP3, via a hosted web page and via ECMP3 over serial connection

Product Application

NRB4 (Beacon Monitor Receiver)

• used to provide “off-air” monitoring of the NDB system by receiving and monitoring key parameters of the transmitted signal

NLA/2 (Receiving Loop Antenna)

• use in conjunction with the NRB4 to receive and monitor the “off-air” signal from the NDB system

Antenna

• used to radiate the required signal and may be either a whip antenna or Helideck antenna configuration

Enhanced Features - Vector System

- Patented solution to maintain system coverage regardless of undesirable antenna effects such as salt build-up on insulators (ATU-LP only)
- Automatic Resistive Matching (ATU-LP only)
- Remote control and monitor of the ATU limits worker exposure to strong RF fields
- Password protected Vector remote control/monitor software application
- Multiple NDBs can be easily controlled and monitored from 1 central site

Enhanced Features - Vector System

- Built in Diagnostics allows the user to easily identify fault to Lowest Repairable Unit locally or remotely
- Non operational side can be tested locally or remotely without need for dummy load while main side remains on air
- Easily configured site control and monitoring available locally or remotely

Vector 125W/250W Transmitter

Exciter/Monitor

- Available with Single or Dual Direct Digital Synthesizer, LVPS, modulator driver, keyer, monitor
- Analog and digital metering
- Remote Interface with several standard and optional configurations
- Simple LCD graphical user interface

125 W/250 W RF Power System

- Available with Dual or Single Highly efficient power modules containing PAs, modulators, SMPS
- Frequency agile harmonic filter

Back-up DC Supply Option

• +24 V dc or + 48 V dc Input is optional with reverse polarity protection and low voltage disconnect
• External +24 V dc or + 48 V dc Battery charger available

Vector 125W/250W Front and Rear View

Diagnostic Display and Graphical User Interface

Analog Meter

RF Output

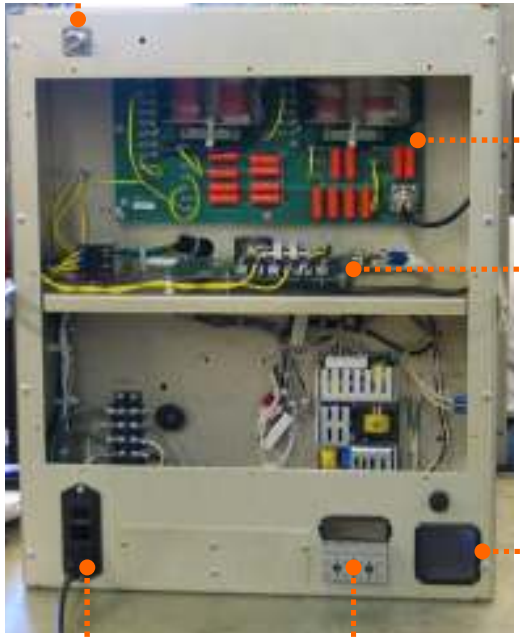

User configurable Harmonic Filter

AC Power Input

DC Power Input

Making Digital Radio **Work.**

Vector 125W/250W Power Module

Highly Efficient
Pulse Duration Modulator (PDM)

PDM Filter

Highly Efficient
Class D Power Amplifier

Impedance Matching
RF Transformer

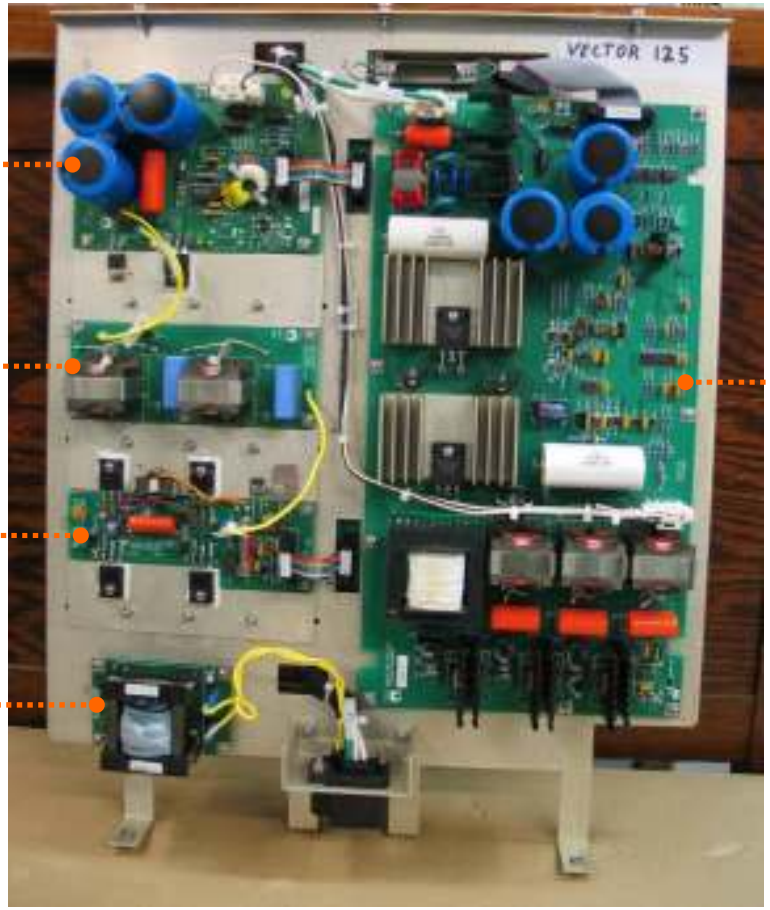

Switch Mode Power Supply

90 V ac to 270 V ac (Vector 125) or 170 V ac to 270 V ac (Vector 250), 47 Hz to 63 Hz without need for adjustment

Vector 125W/250W Exciter

Direct Digital Synthesizer

Single channel with 100 Hz steps having a Frequency Stability of ± 0.0003% over full environmental range

Exciter Interface

Contains circuitry to switch exciters when dual and provides interface between exciter pwbs and the other blocks contained in the transmitter

Exciter/Monitor/Generator

Monitors critical ICAO parameters and contains microprocessor controlled keyer for ease of programming of 1,2,3,4,5or 6 Morse letters or numbers, Frame lengths of 4 to 20 seconds, Sequence repetitions, standby codes and Keyed Tone Frequencies of 400 Hz or 1,020 Hz ±5%

Modulator Driver Pwb

Creates the low level drive signal for the Pulse Duration Modulator which includes line voltage compensation

+24 VDC Supply Output for ATU

Vector 125W/250W Control/Monitor

Liquid Crystal Display

Control/Display Pwb

Performs most of the operations associated with control, monitor, protection and display for the transmitter. It is essentially the “brain” for the Vector.

Speaker

Allows user to audibly monitor the Identification Code

Sonalert

Provides user capability to configure alarms to be audible

Remote Interface

Contains user interface connections for ATU Control/Monitor and Remote Control/Monitor

Site Control/Monitor

Contains 16 optically isolated monitor inputs and 16 form C contact relay closure control points to allow the Vector local or remote control/monitor to control/monitor other equipment at the site

Vector Graphical User Interface and Display

Analog Meter

User configurable display including, but not limited to, any one of the following parameters: Forward Power, Reflected Power, Antenna Current, Modulation Percentage, DC Voltages, DC Current, VSWR, AC Voltage, Transmitter, Temperature and PA Volts

System Diagram

Provides user with local display of the status of the critical blocks within the transmitter

Diagnostic Display

Allows complete local transmitter and ATU control, status and local/remote health monitoring and provides a 256 event log

Carrier Frequency and Emission Modes

- Standard NDB carrier frequency band (190 kHz – 535 kHz) or Extended band (536 kHz – 1250 kHz and 1600 kHz - 1800 kHz) for VR125

- NON (CW no modulation)

- A2A (MCW double sideband keyed tone)

- A2A & A3E (Simultaneous AM double sideband telephony and MCW double sideband keyed tone)

Monitor Failure Thresholds

Adjustable threshold normally set so that changeover can occur if:

- Carrier power reduces more than 3 dB
- Carrier power increases more than 2 dB
- Modulation level reduces more than 4 dB
- Incorrect identification code

When the output power level changes in current feed back mode, the fault thresholds adjust to reflect the new output power level.

Harmonics, Hum & Noise, Distortion

- Harmonic Levels not exceeding -70 dB relative to carrier when used in conjunction with an ATU500SR or ATU-LP into a standard antenna load
- Hum and Noise not exceeding -50 dB relative to 1,020 Hz at a modulation level of 95%
- Audio Distortion Less than 3% at 95% modulation

Reliability and Repair Time

MTBF Transmitter

- Greater than or equal to 12,590 hours for single and 17,640 hours for dual using MIL_HDBK 217E calculation methods
- Field experience indicates MTBF in excess of 3,000,000 hours for Nautel NDB systems

MTTR Transmitter

- Less than or equal to ½ hour at PWB/module level

Environmental, Climate, and Altitude

Environmental Limits

Operating: -30ºC to +55 ºC
0% to 95% relative humidity

Storage: -30ºC to +70 ºC
0% to 95% relative humidity

Climate

Any including tropical

Altitude

Up to 3, 048 m (10, 000 ft)

Input Power Requirements

Vector 125

Single phase 90 V ac to 270 V ac, 50/60 Hz, 500 VA maximum,
dc 24V dc @ 12.6A max or dc 48V dc @ 6.3A max

Compliances

- Designed with intent to comply with Safety Code 6, IEEE C95.1-1999
- Compliance with Industry Canada RSS117
- ICAO Annex 10, Volume 1, Part 1, Section 3.4
- Designed for R&TTE 1999/5/EEC compliance
- ISTA Procedure 1A/1B
- Compliance with EN60215:1996 safety requirements for radio transmitting equipment
- Compliant with Green Passport requirements

Warranty

Standard Warranty

- 18 months from date of shipment.

Extended Warranty

- available at an additional cost.

Options

- Dual operation
- + 48 V dc back-up operation for Vector 125/250
- + 24 V dc back-up operation for Vector 125
- External Battery chargers
- Extended warranty
- Extended frequency band (536 kHz – 1200 kHz and 1600 kHz – 1800 kHz) for Vector 125
- NDB site control/monitor
- Modem or USB
- NDB extended and remote control/monitor
- CSA Inspection
- 19 inch deluxe [185.9 cm H (73.2 in) and 104 cm H (40.9 in) available] and IP66 Cabinets

ATU500SR 125W Antenna Tuning Unit

ATU500

Adjustable Spark Gap with intrinsic static drain

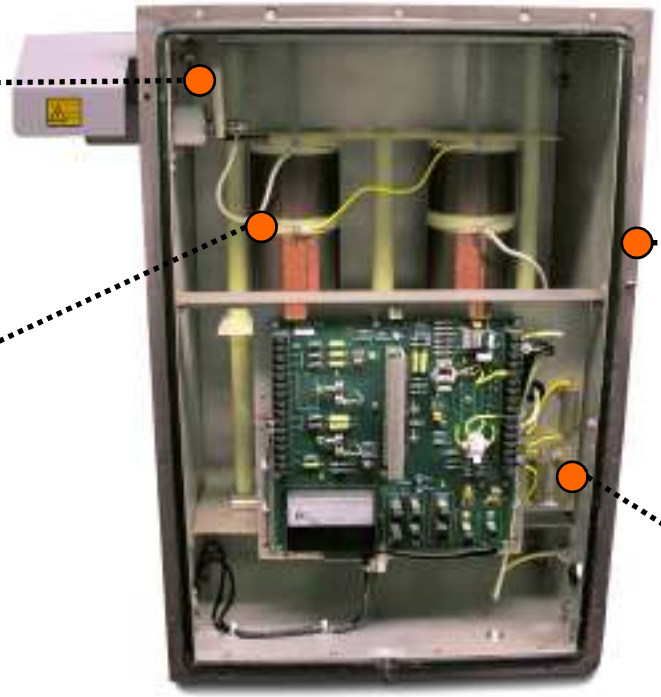

125 W Antenna Tuning Unit

IP66 Compliant Cabinet manufactured from Marine Grade Aluminum with protective finish suitable for global environments

Servo Controlled and Automatic Fine Tuned Astatic pair of Loading coils which can be connected series or parallel for maximum agility

Bandwidth Optimization to minimize VSWR, sideband attenuation and distortion as compromise between bandwidth and range

ATU500SR 125W ATU Features

Remote Control/Monitor

- Limited capability to be controlled and monitored at the Vector transmitter and remotely via the Vector remote control/monitor application

Bandwidth Limitation Solution

- Optional adjustable series resistor
- Optimize range and bandwidth
- Minimize VSWR, sideband attenuation and distortion

ATU500SR 125W ATU Features

MTBF ATU500

- Greater than or equal to 99,844 hours using MIL_HDBK 217E calculation methods
- Field experience indicates MTBF in excess of 3,000,000 hours for Nautel NDB systems

MTTR ATU500

- Less than or equal to ½ hour at PWB/module level

Vector ATU-LP Overview

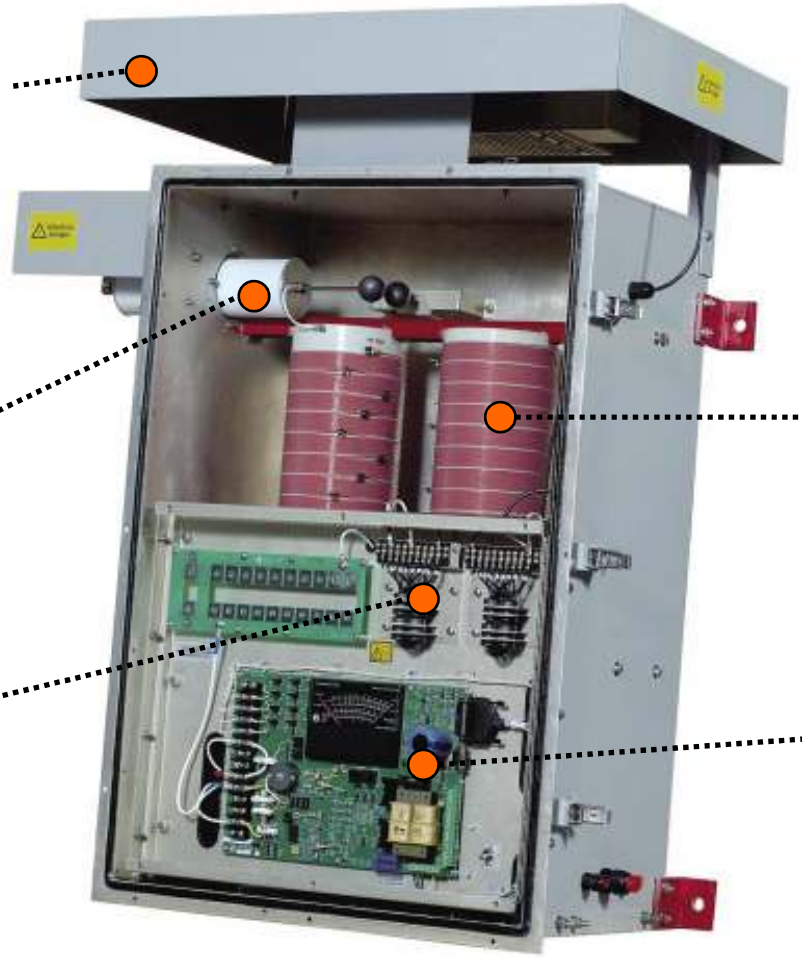

Optional Sunshield or Optional External Series Resistor

High Voltage Output Insulator and Adjustable Graphite Spark Balls

Fixed Resistive Matching Transformer

Automatic Servo Controlled, Astatic & Low Loss Inductors (Q of 600) for Reactive Tuning

ATU Control/Monitor Pwb contains status LEDs to ensure correct tuning and matching is achieved

Automatic Resistive Matcher

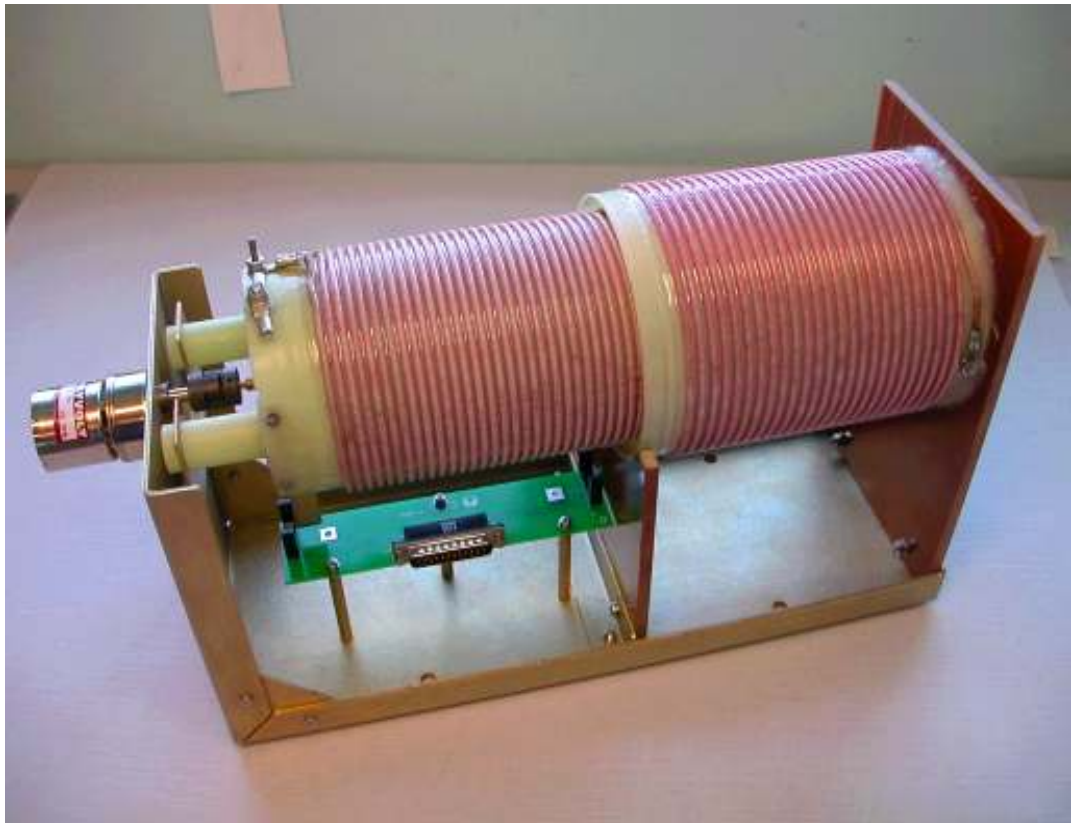

Servo Controlled

Mutually Coupled Inductors

±2:1 change in resistive load (or 4:1) overall

ATU-LP Enhanced Features

- Automatic resistive matcher allows resistive changes in the antenna system such as salt build up on the antenna to be automatically matched.

- The ATU-LP serial data link between the Vector series transmitters and the ATU-LP allows increased capability to control and monitor the ATU-LP from the Vector transmitter and remotely via the Vector RCMS.

- The Vector series transmitters when used with the ATU-LP (and not the ATU500) provide a Constant field strength output for higher system availability. The serial data link between the ATU-LP and the Vector transmitter stabilizes the antenna current, and the radiated power, by automatically adjusting the transmitter output power.

ECMP3 – Extended Control/Monitor

- Extended control and monitor functions within a maximum distance of 152 m (500 ft) from the Vector NDB.
- 7 visual system indicators (LEDs) and indicator Test switch. LED brightness is adjustable to one of three levels.
- 3 switches for remote command and 1 user configurable spare command switch.
- User configured and enabled timer and audible alarm.
- User configurable to remotely control/monitor any of the Vector System's remote control/monitor points.
- Site control/monitor pwb for Vector NDB required.

ECMP3 – Extended Control/Monitor

SONALERT

The ECMP3 contains a Sonalert, which can be configured to provide an audible indication that a monitor point is asserted.

Each monitor point can be configured to independently activate the Sonalert.

Sonalert volume is adjustable to one of three levels.

The Sonalert may be configured to sound when a monitor point activates <u>or</u> when a monitor point activates or de-activates (alarm occurs or alarm disappears).

The Acknowledge momentary push button switch is used for silencing an audible alarm event.

Vector NDB & ECMP3 Interconnect

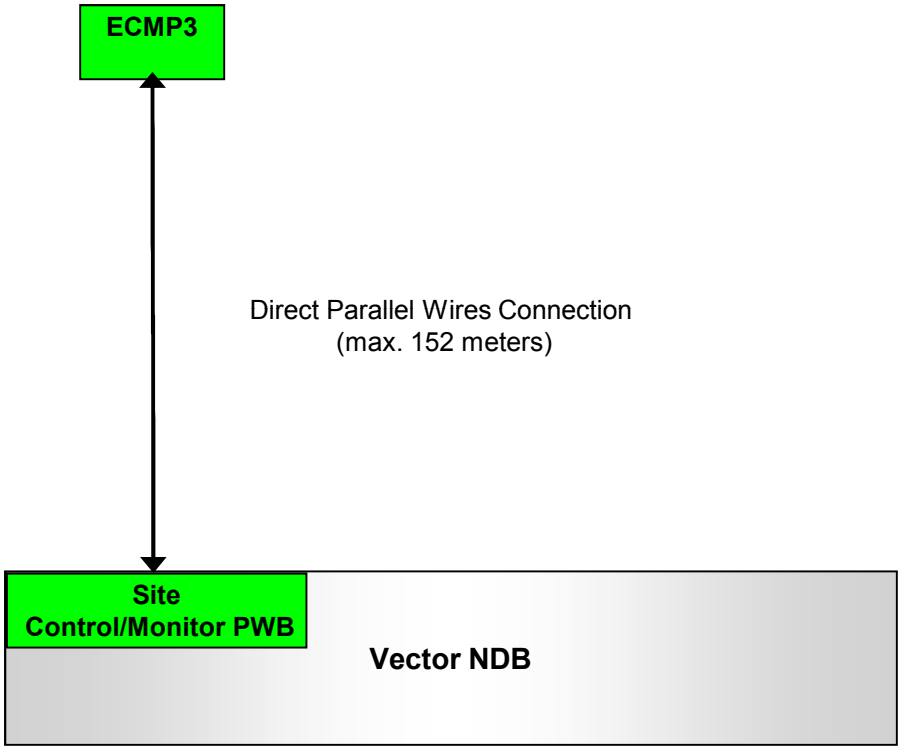

Vector NDB RCMS via VR-Link

- Economical means of remote control/monitor of one Vector NDB system.
- Standard VR-LINK connections to the NDB include RS232, RS422. Optional leased line/dial-up modems and Wired/Wireless Serial Server connections for network applications are also available.
- Complete control/monitor of the NDB and ATU using a text based display via hosted web page.
- ECMP3 (Extended Control/Monitor Panel) can be integrated into VR-LINK or a total of 3 ECMP3's can be connected externally to the VR-LINK via RS-485 serial communication.

VR-Link - Web Based RCMS

- Web based remote monitoring and control of Nautel Vector NDB system
- Remote access to alarm/information logs
- Email reporting of critical alarms, upon request
- Data server for integration with existing remote control equipment

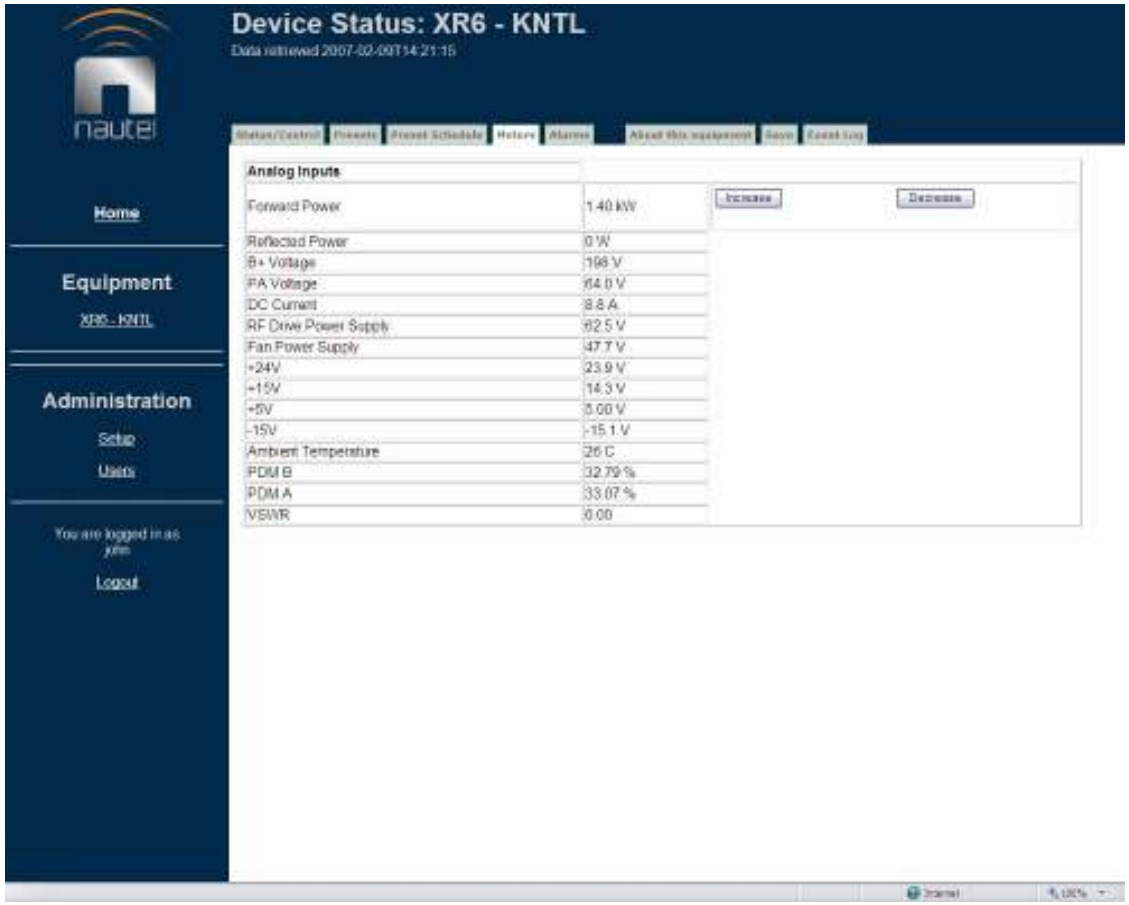

Making Digital Radio **Work.**

Vector NDB & VR-Link Configurations

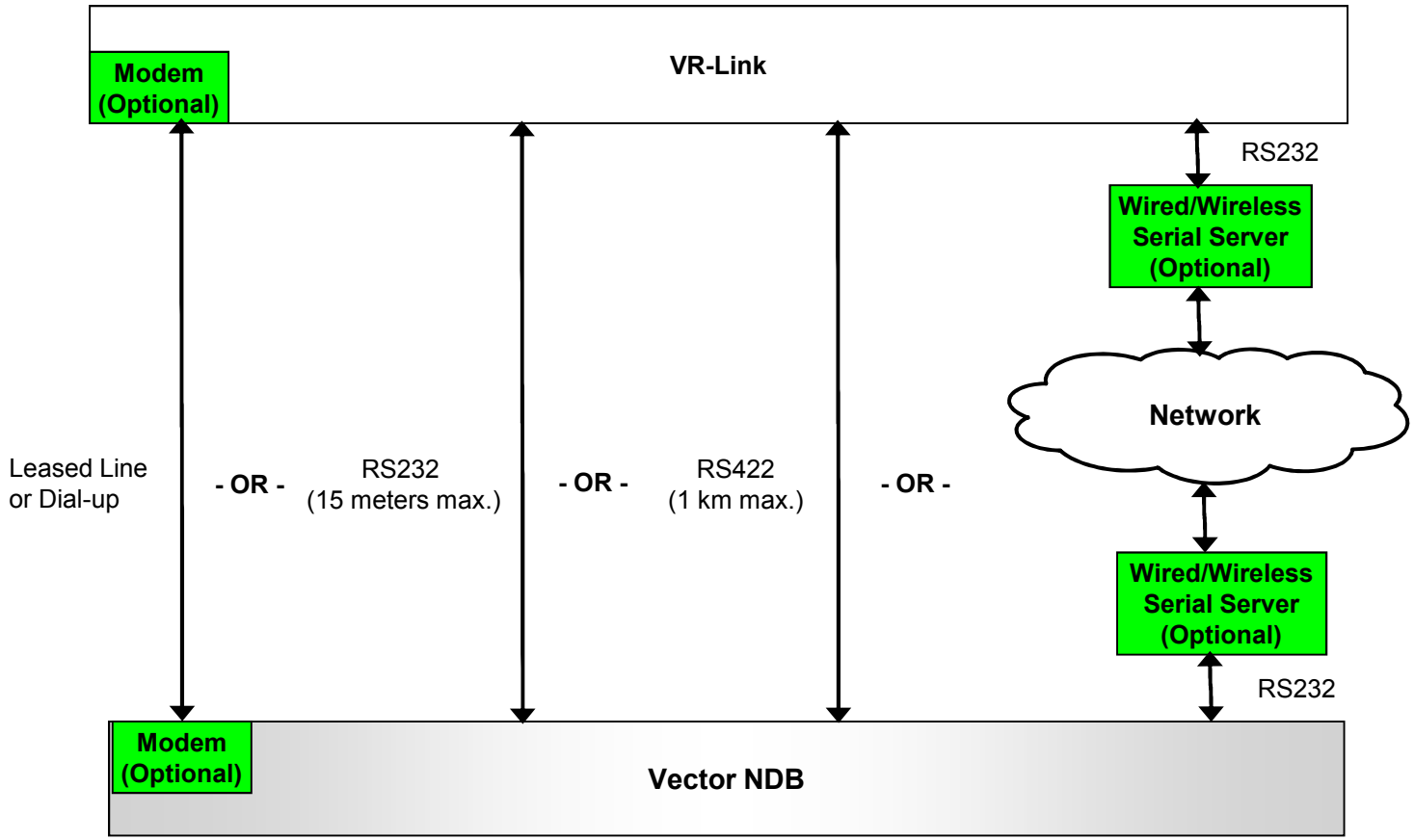

Making Digital Radio **Work.**

RCMS via VR-Link

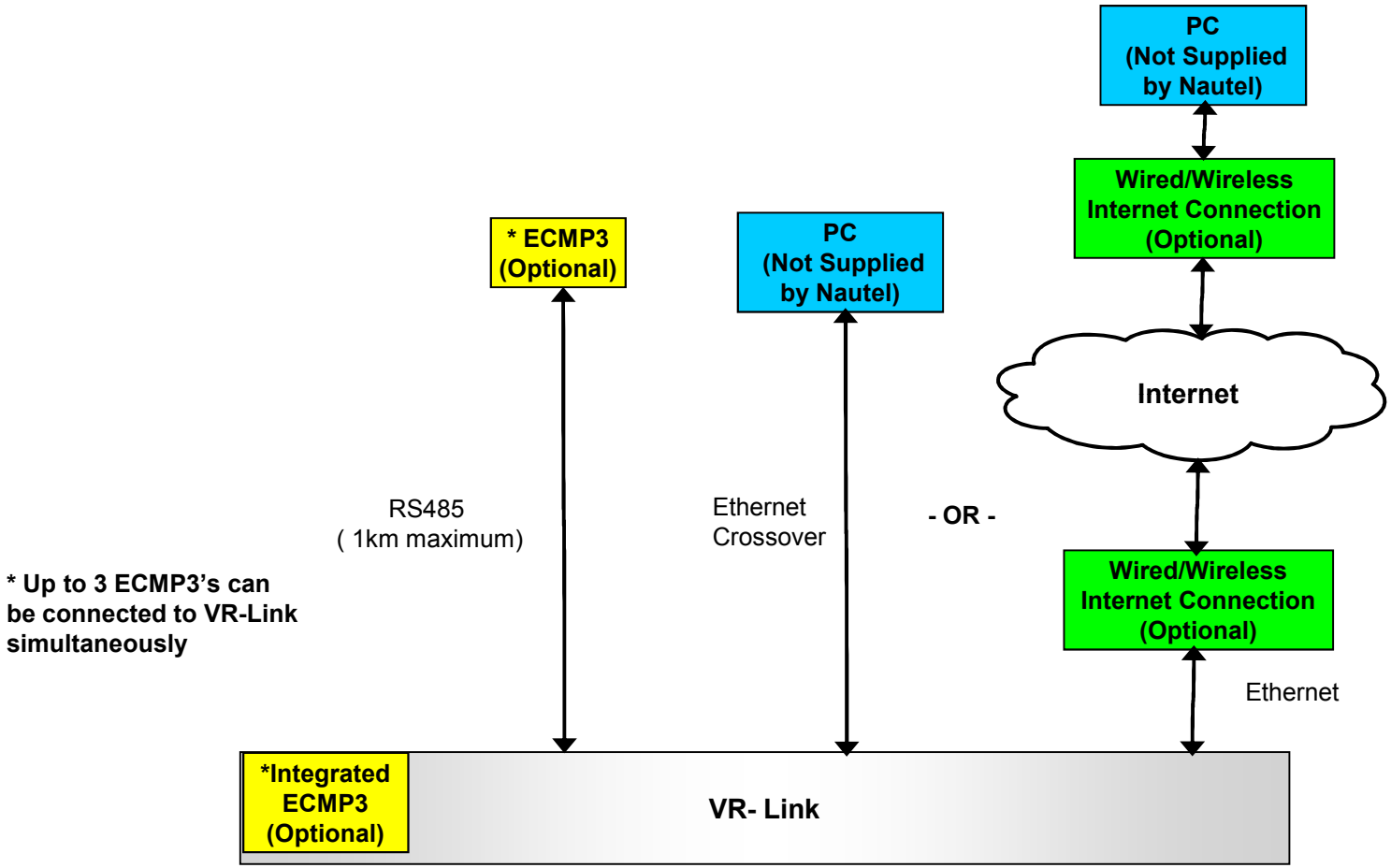

* Up to 3 ECMP3's can be connected to VR-Link simultaneously

Making Digital Radio **Work.**

Typical Offshore RCMS Configuration

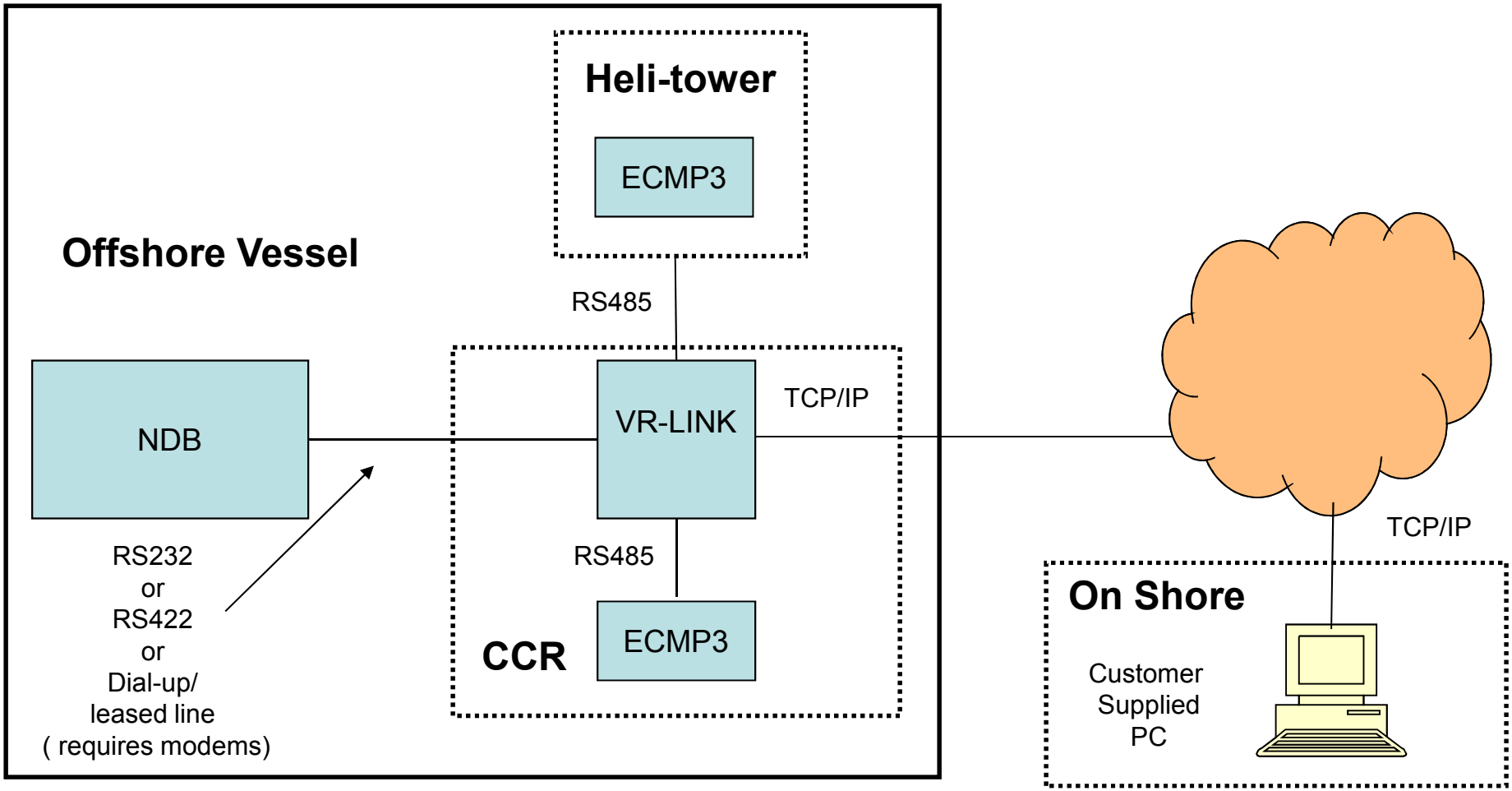

Making Digital Radio **Work.**

NRB4 & NLA/2 “OFF AIR” Monitor

NRB4

Beacon Monitor Receiver

NLA/2

Receiving Loop Antenna

Making Digital Radio **Work.**

NRB4 & NLA/2 “OFF AIR” Monitor

NRB4 Beacon Monitor Receiver

Monitors:

- **Presence of Carrier**
- **Presence of Keyed Tone**

Provides visible alarm if either carrier or modulation fall below thresholds.

NRB4 & NLA/2 “OFF AIR” Monitor

NRB4 Beacon Monitor Receiver

Provides:

- **Transformer coupled audio output sample**
- **Contact closures for external carrier or mod fail alarms – these can be used to activate user supplied audible alarm if required**

NRB4 & NLA/2 Features

Precise and Frequency Agile

- Direct Digital Synthesizer
- No additional parts required for change of frequency
- Excellent selectivity defined by stable IF crystal filter

Off-Air Monitoring of FAA and ICAO requirements

- Adjustable thresholds and Time delays for reduction in carrier power , reduction in modulation depth and loss of keying
- Local and Remote Audio Monitoring
- Calibrated Carrier Level Meter

Offshore NDB Antennas

Product	Antenna Type
Whip Antennas	8 m (26 ft.) - 10.7 m (35 ft.)
Nautel CL-HD	Helideck Longwire antenna

Whip Antennas

- 8 m (26 ft.) - 10.7 m (35 ft.) high
- Low Cost
- Frequency Agile
- Narrow Band can result in problems due to sideband attenuation and VSWR related issues
- Inefficient Radiator

CL-HD Helideck Antenna

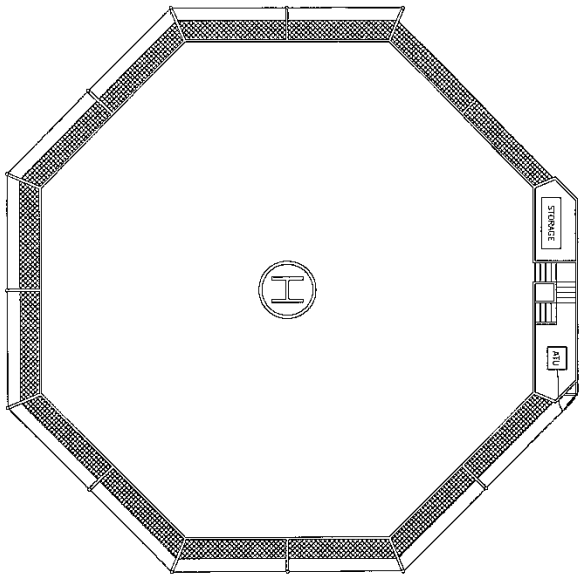

- Designed to suit a variety of Helideck configurations
- Designed for Compliance to CAP437
- Frequency Agile
- Approx. 7.54 pF/m (2.3 pF/ft)
- Sold to suit Helideck configuration (not 1 size fits all)

Whip Antenna Performance

35 ft.(10.7m) whip antenna, 130 pF
Transmitter RF Power: 125 watts
ATU: ATU500SR
Required Signal Strength: 70 uV/m
Conductivity over Saltwater: 5 mS/m

Physical Height at base of antenna above Sea Water	Range Estimate and Bandwidth @ 200 kHz	Range Estimate and Bandwidth @ 250 kHz	Range Estimate and Bandwidth @ 300 kHz	Range Estimate and Bandwidth @ 400 kHz	Range Estimate and Bandwidth @ 500 kHz
65 ft. (19.8 m)	N/A	220 km BW - 870 Hz	260 km BW - 1080 Hz	320 km BW - 1550 Hz	380 km BW - 2180 Hz
100 ft. (30.5 m)	N/A	280 km BW - 900 Hz	320 km BW - 1140 Hz	380 km BW - 1750 Hz	420 km BW - 2650 Hz
130 ft. (39.6m)	N/A	320 km BW - 940 Hz	380 km BW - 1210 Hz	420 km BW - 1970 Hz	460 km BW - 3190 Hz
160 ft. (48.8 m)	N/A	340 km BW - 980 Hz	400 km BW - 1290 Hz	440 km BW - 2240 Hz	480 km BW - 3840 Hz

CL-HD Helideck Antenna Performance

CL-HD: 100 - 300 ft (30.5 - 91.5 m), 2.3 pF/ft, 200 ft (61 m) used for estimate
Transmitter RF Power: 125 watts
ATU: ATU500SR
Required Signal Strength: 70 uv/m
Conductivity over Saltwater: 5 mS/m

Physical Height at base of antenna above Sea Water	Range Estimate and Bandwidth @ 200 kHz	Range Estimate and Bandwidth @ 250 kHz	Range Estimate and Bandwidth @ 300 kHz	Range Estimate and Bandwidth @ 400 kHz	Range Estimate and Bandwidth @ 500 kHz
65 ft. (19.8 m)	240 km BW - 720 Hz	300 km BW - 940 Hz	340 km BW - 1210 Hz	380 km BW - 1910 Hz	440 km BW - 2990 Hz
100 ft. (30.5 m)	320 km BW - 760 Hz	380 km BW - 1040 Hz	400 km BW - 1410 Hz	440 km BW - 2570 Hz	460 km BW - 4590 Hz
130 ft. (39.6m)	380 km BW - 810 Hz	420 km BW - 1160 Hz	460 km BW - 1660 Hz	480 km BW - 3350 Hz	480 km BW - 6500 Hz
160 ft. (48.8 m)	400 km BW - 870 Hz	460 km BW - 1310 Hz	480 km BW - 1970 Hz	500 km BW - 4330 Hz	500 km BW - 8910 Hz

Antenna Performance Notes

- The minimum bandwidth required for 400 Hz modulation should be in excess of 800 Hz and for 1020 Hz modulation should be in excess of 2040 Hz.

- Modulating tone which exceeds the bandwidth will result in significant sideband attenuation, inability to achieve 95% modulation and VSWR at the transmitter.

- The addition of series resistance (available as standard in the ATU500 and optionally in the ATU-LP) can be used as a trade off between bandwidth and range if necessary

- The ATU500/ATU-LP will not tune most whip antennas below 250 kHz due to the low capacitance of the antenna.

- Increased length of radiating wire will increase the bandwidth and range. Decreased length of radiating wire will reduce the bandwidth and range. It is always best to install as close to the maximum supplied length of radiating wire (300 ft./91.5m) as possible. The minimum recommended length for the radiating wire of the CL-HD is 100 ft.(30.5 m).

Offshore NDB System Interconnection Diagram

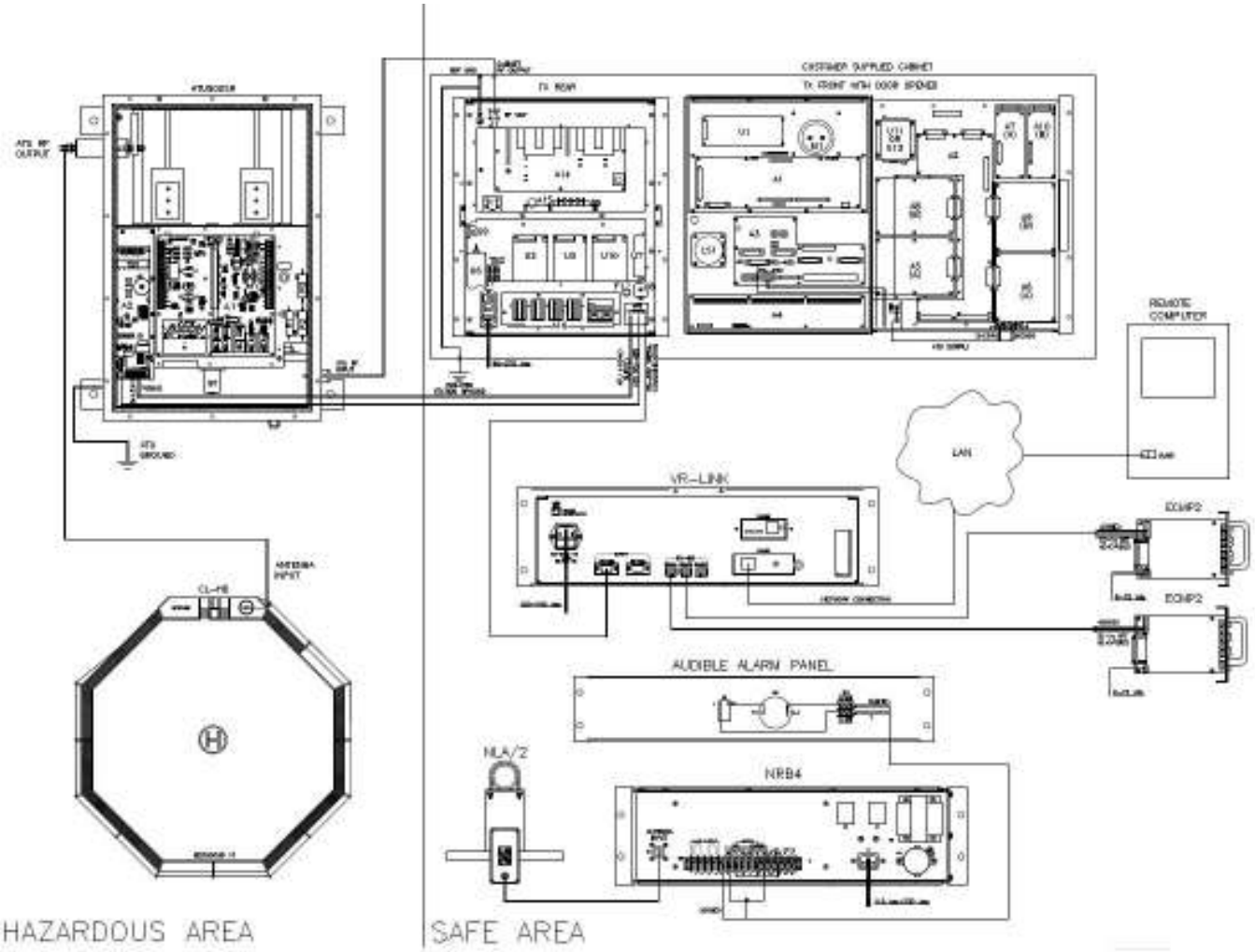

Making Digital Radio **Work.**

Key NDB System Configuration Parameters

- Carrier frequency (kHz)
- Modulation frequency (400 Hz or 1020 Hz)
- Identification (Morse) Code
- Maximum carrier power (125 Watts typical for offshore applications)
- Transmitter configuration (single or dual)
- Transmitter enclosure requirement (customer cabinet, deluxe cabinet, or IP66 enclosure)
- DC operation requirement (DC or battery back-up)
- Remote control/monitoring requirement (number of locations and distances to the site)
- Off-air reception and monitoring requirement (NRB4 Receiver + NLA/2 Loop Antenna)
- Antenna style (whip or Helideck)

Other Considerations

- Training
  - Nautel factory
  - Nautel representative/distributor premises
  - end user premises
- Installation Supervision
  - end user technical staff
  - Nautel representative/distributor technical staff
  - Nautel technical staff
- Commissioning and Site Acceptance
  - end user technical staff
  - Nautel representative/distributor technical staff
  - Nautel technical staff
- Extended warranty (available in yearly increments after initial 18 month warranty)

Contacts - NDB Products

Gary Galbraith, P.Eng.

Technical Sales Representative, Navigational Products

ggalbraith@nautel.com

Tel: +1 902 823 5144

Hilary Chisholm

Coordinator, Navigational Product Sales

hchisholm@nautel.com

Tel: +1 902 823 5177

Thank You

Making Digital Radio **Work.**